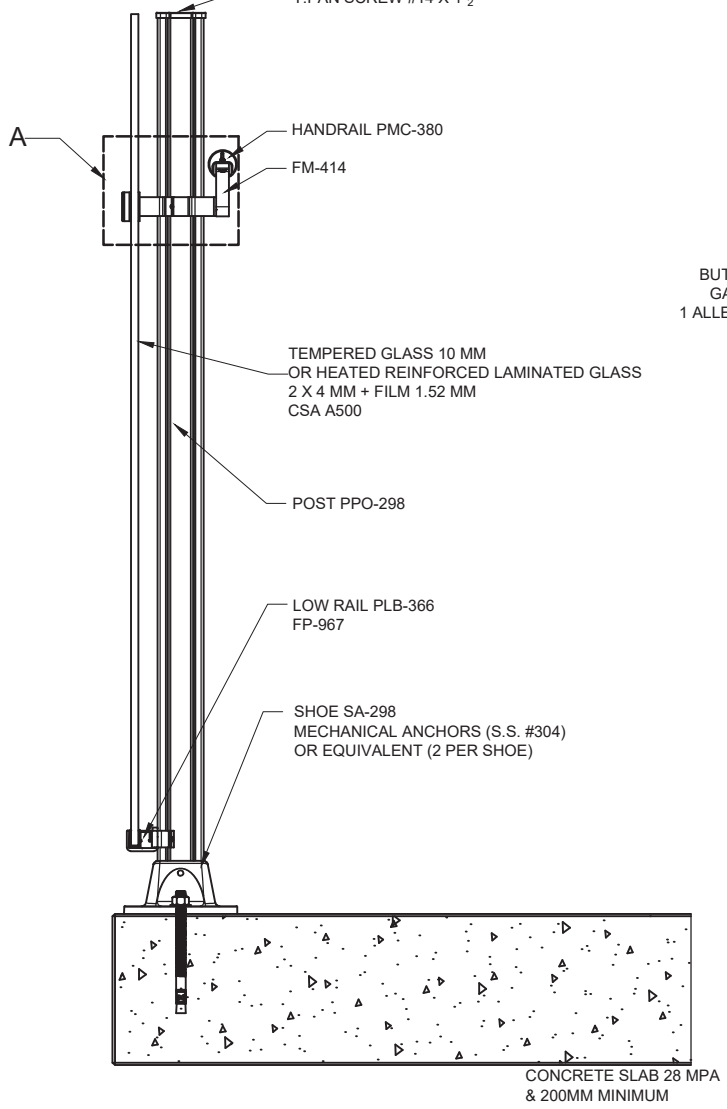

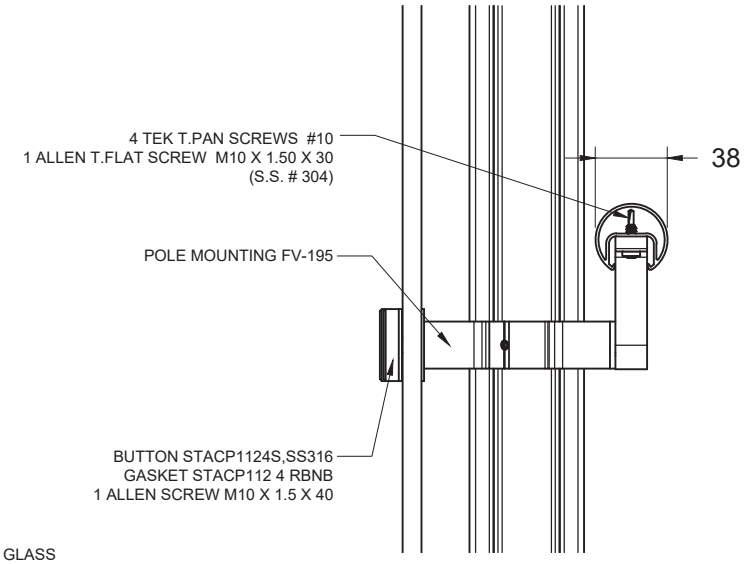

DETAIL A
VIEW 1:4

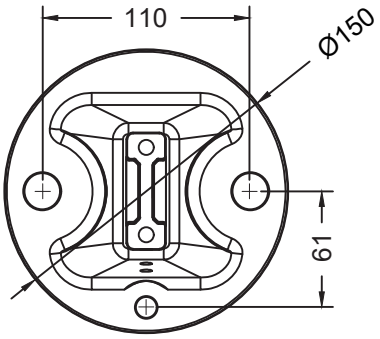

DETAIL SA-298
VIEW 1:4

SECTION B

Scale : 1:10

SPIDER HYBRID MODEL - ON SLAB

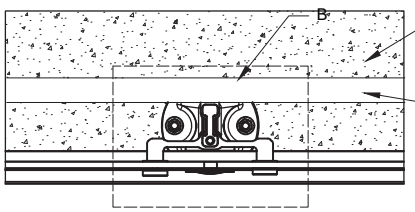

SECTION A-A
VIEW 1:12

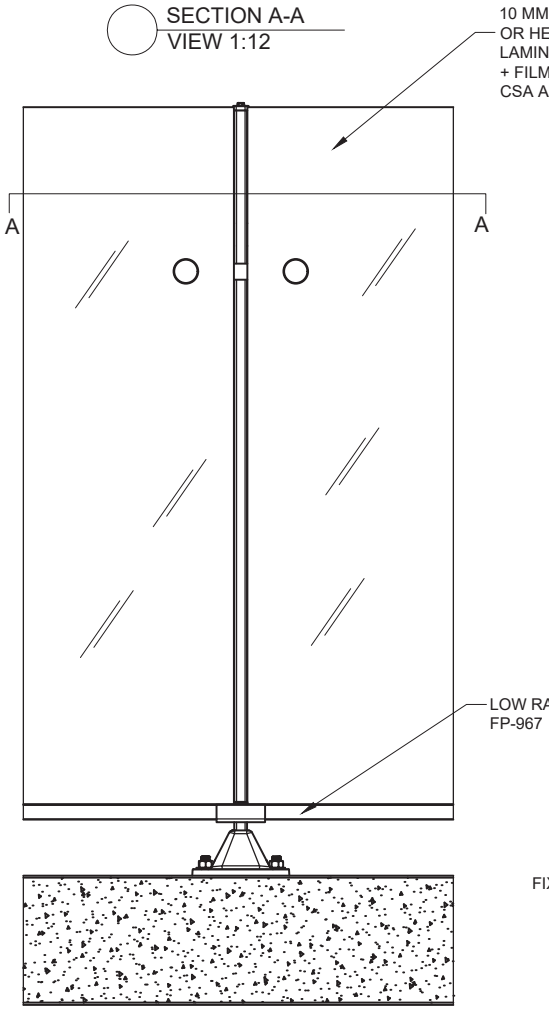

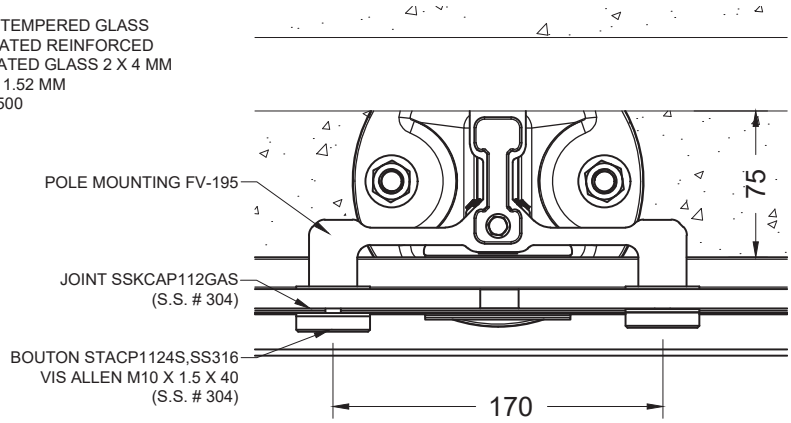

SECTION A-A
VIEW 1:4

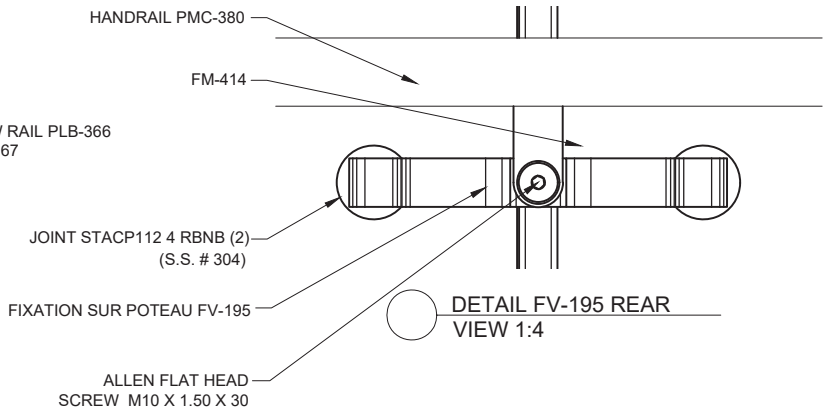

DETAIL FV-195 REAR
VIEW 1:4

SECTION B

Scale : 1:12

SPIDER HYBRID MODEL - ON SLAB